SIMBIOSI

It's a little sleight of hand, based on the possibility to connect the diodes in series using a very low constant power and then very thin wires. You can design the lamp as you like bringing the light wherever you want. The whole appears light and hardly possible.

DETAILS.
FINISH:
MATT WHITE/WHITE CEILING ROSE/RED WIRE
MATT TOTAL BLACK/BLACK CEILING ROSE/ANTHRACITE GRAY WIRE

SHADE SIZE: Ø1.2" X 6.5" H
CANOPY: Ø6.5" X 1.2" H
118" OAH

15W LED 120V
3000K 960 LM
***AVAILABLE IN 2700K.**

1-10V DIMMABLE

SIMBIOSI

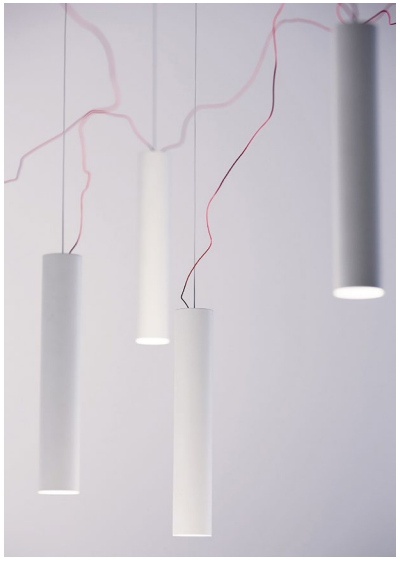

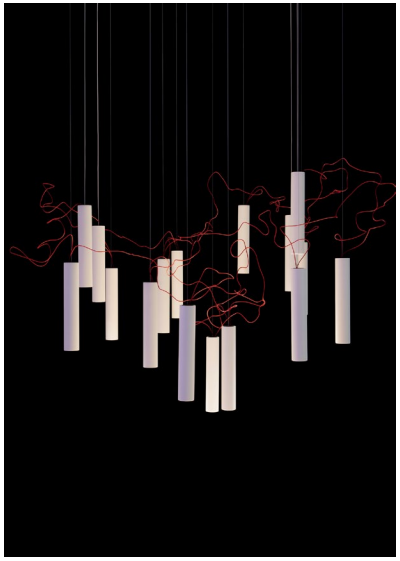

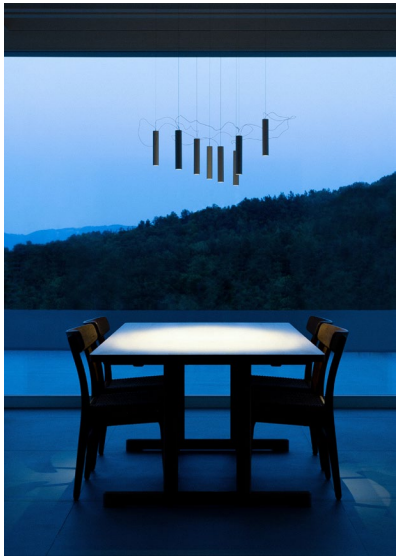
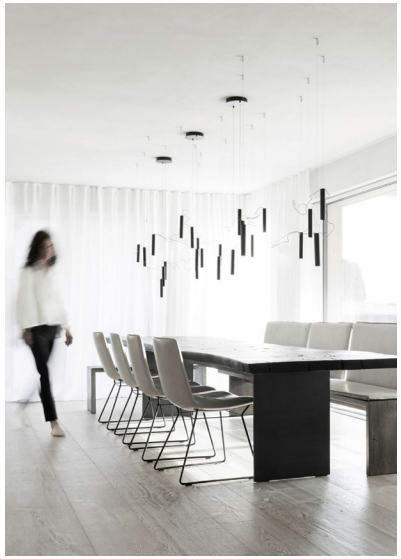

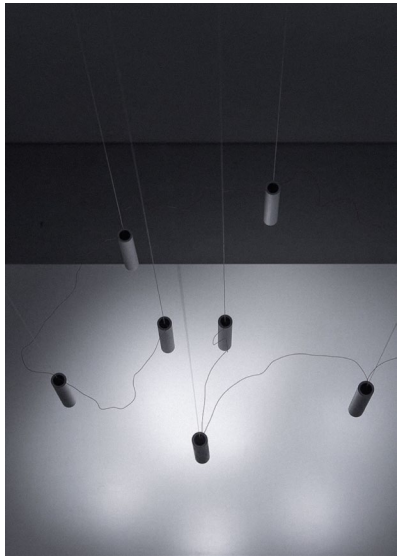

IIPL

PLUGLIGHTING.COM
INFO@PLUGLIGHTING.COM

5665 MELROSE AVENUE
STE 108 LOS ANGELES 90038

P. 323 467 5635
F. 323 467 5634

SIMBIOSI

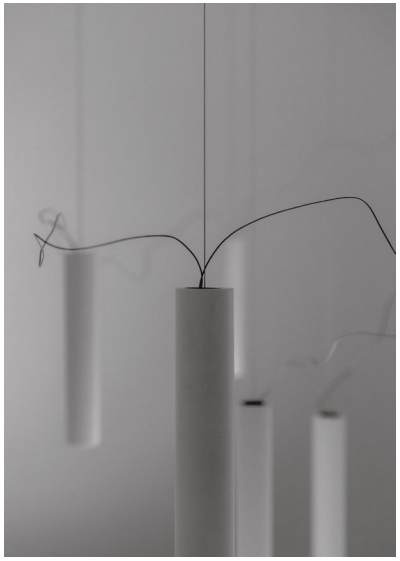
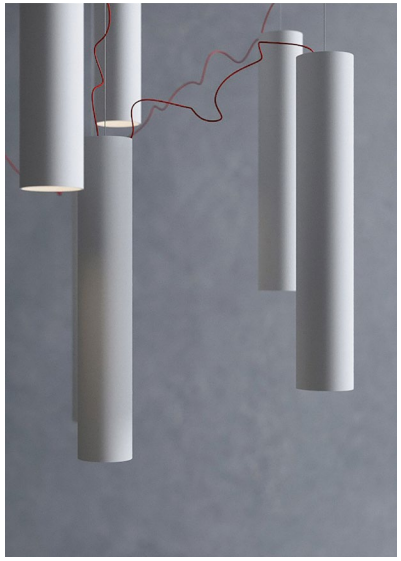
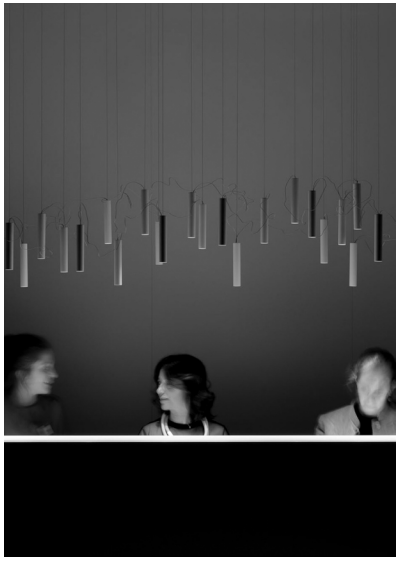
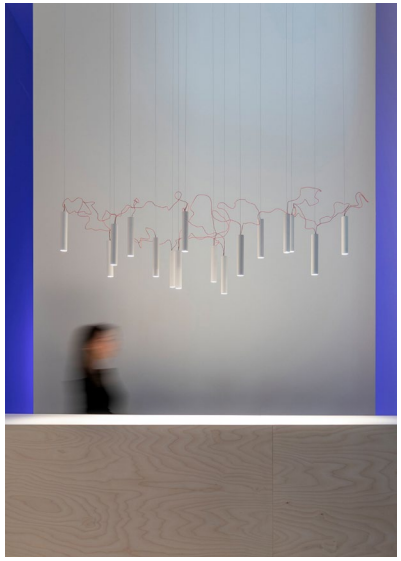

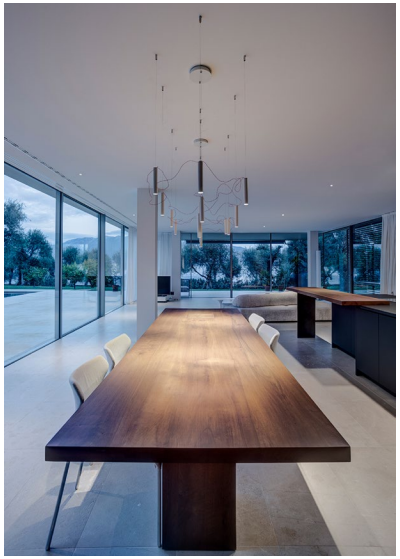

II P L

PLUGLIGHTING.COM
INFO@PLUGLIGHTING.COM

5665 MELROSE AVENUE
STE 108 LOS ANGELES 90038

P. 323 467 5635
F. 323 467 5634

SIMBIOSI

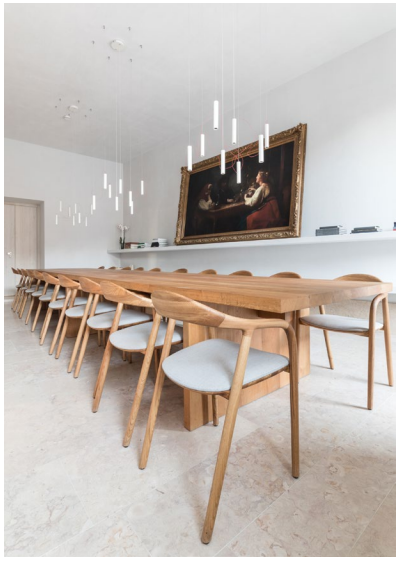

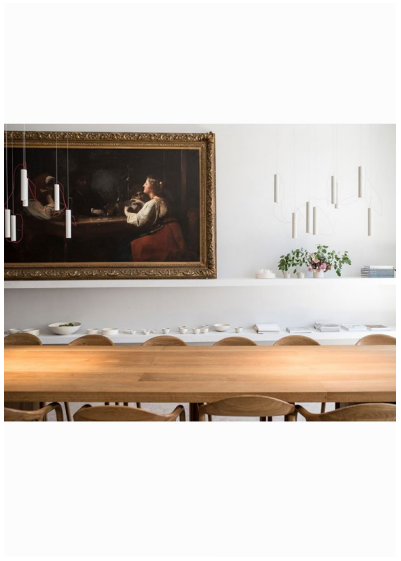

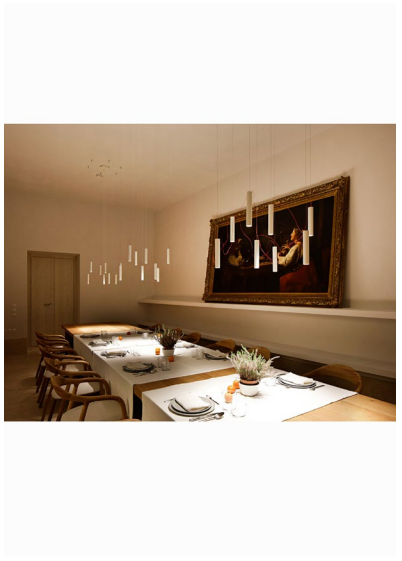

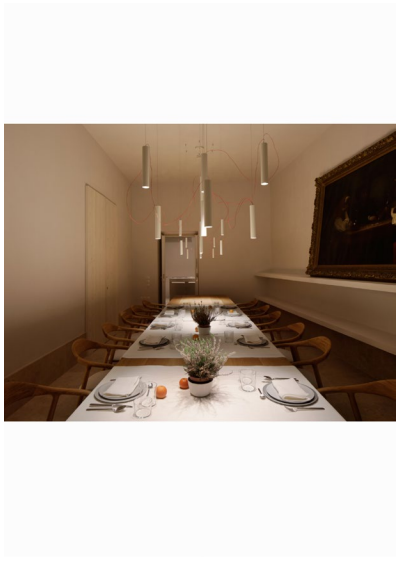

II P L

PLUGLIGHTING.COM
INFO@PLUGLIGHTING.COM

5665 MELROSE AVENUE
STE 108 LOS ANGELES 90038

P. 323 467 5635
F. 323 467 5634

SIMBIOSI

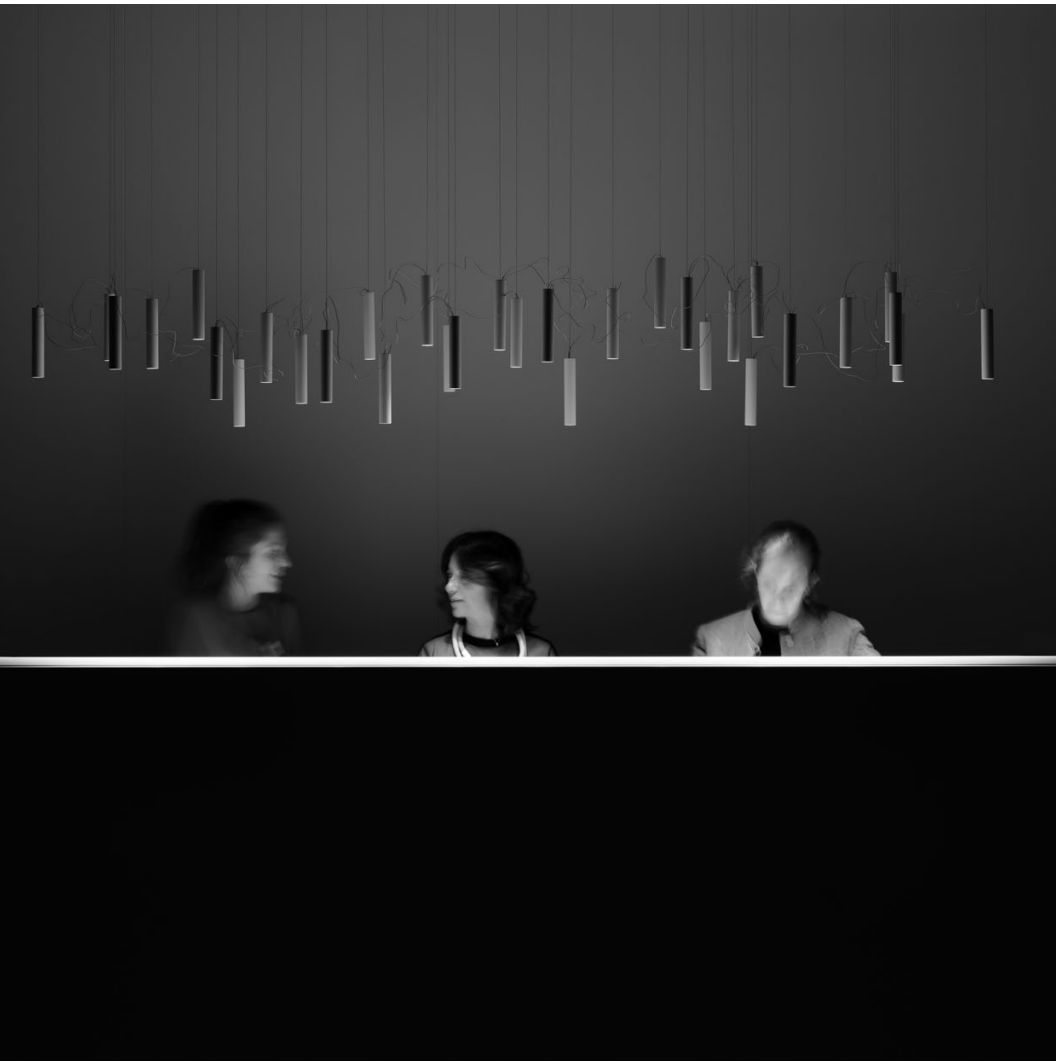

The sizes are expressed in millimeters / inches.

DESIGN DAVIDE GROPPI - 2015
SUSPENSION LAMP - METAL

CEILING ROSE

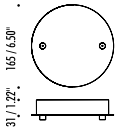

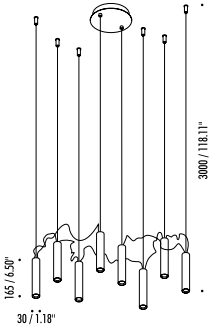

18040303	MATT WHITE - 3000K	120 V - 60 Hz - 18,5 W LED - 960 lm - CRI > 90 WHITE CEILING ROSE - 1-10 V - PUSH DIMMABLE RED WIRES FOR LED MODULES CONNECTION OPTIONAL ACCESSORIES SUSPENSION KIT NOT INCLUDED
18040303-27	MATT WHITE - 2700K	
18042603	MATT TOTAL BLACK - 3000K	120 V - 60 Hz - 18,5 W LED - 960 lm - CRI > 90 BLACK CEILING ROSE - PUSH - 1-10 V DIMMABLE ANTHRACITE GRAY WIRES FOR LED MODULES CONNECTION OPTIONAL ACCESSORIES SUSPENSION KIT NOT INCLUDED
18042603-27	MATT TOTAL BLACK - 2700K	

IIPL

PLUGLIGHTING.COM
INFO@PLUGLIGHTING.COM

5665 MELROSE AVENUE
STE 108 LOS ANGELES 90038

P. 323 467 5635
F. 323 467 5634

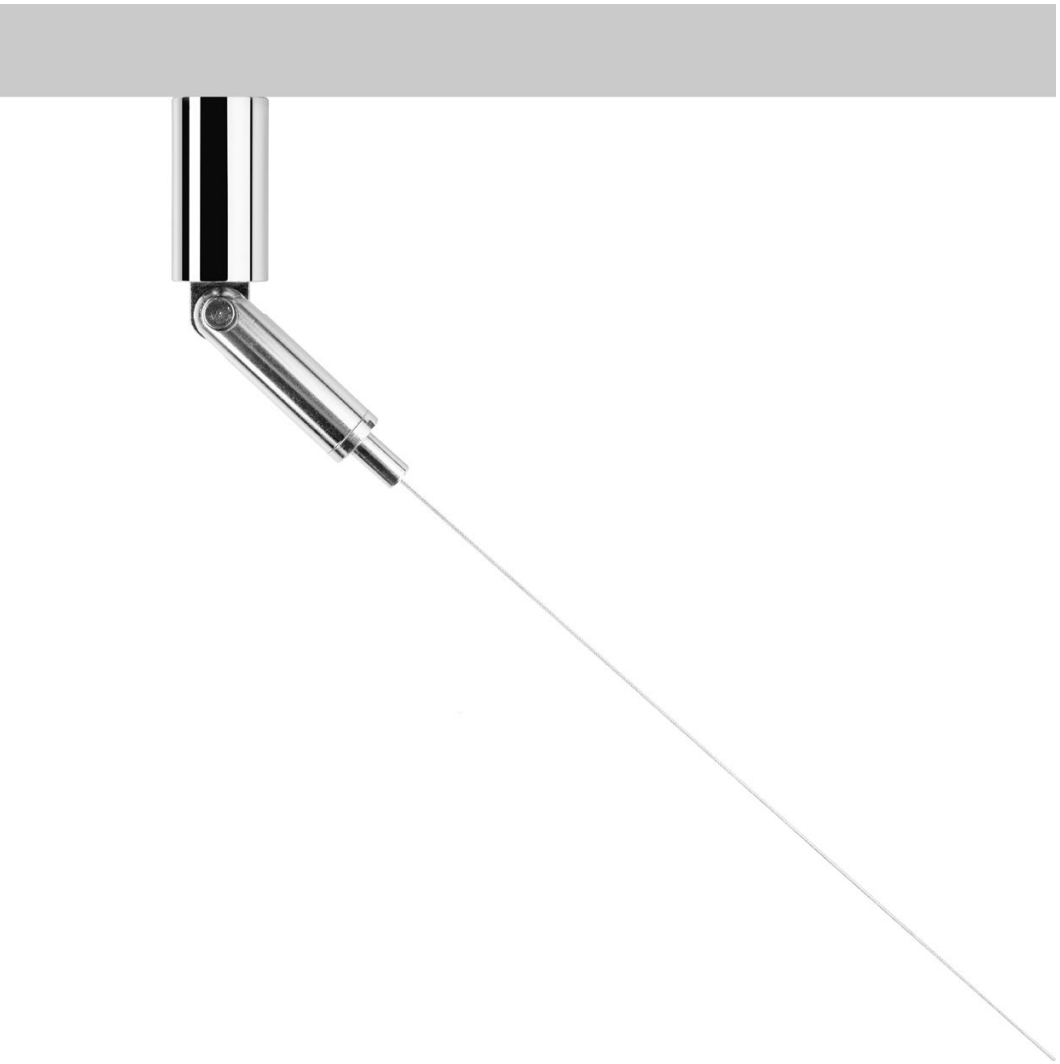

The sizes are expressed in millimeters / inches.

OPTIONAL ACCESSORIES

1A0510003	STANDARD	SLOPED CEILING FIXING KIT COMPATIBLE LAMPS: QuiQuoQua - MASAI - FOSBURY - MOON 120	

1A0520003	STANDARD	SLOPED ROSE FIXING KIT COMPATIBLE LAMPS: MOON 60 - MOON 60 DE - MOON 80	

1A0530003	STANDARD	SLOPED CEILING FIXING HOOK COMPATIBLE LAMPS: MERIDIANA - SIMBIOSI - SHANGHAI	

17270303	MATT WHITE	CLAMP	
17270403	MATT BLACK		

1A0510003 - SLOPED CEILING FIXING KIT

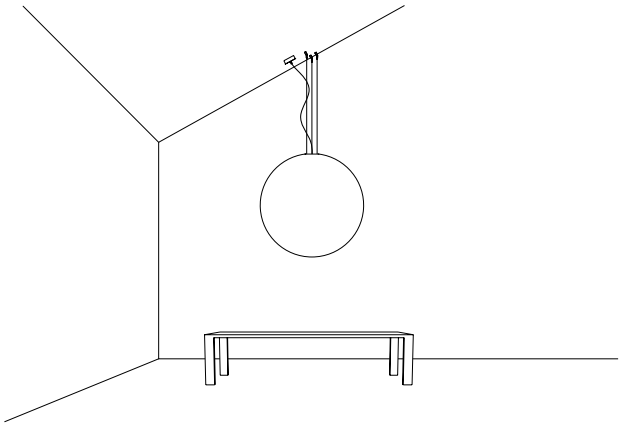

1A0520003 - SLOPED ROSE FIXING KIT

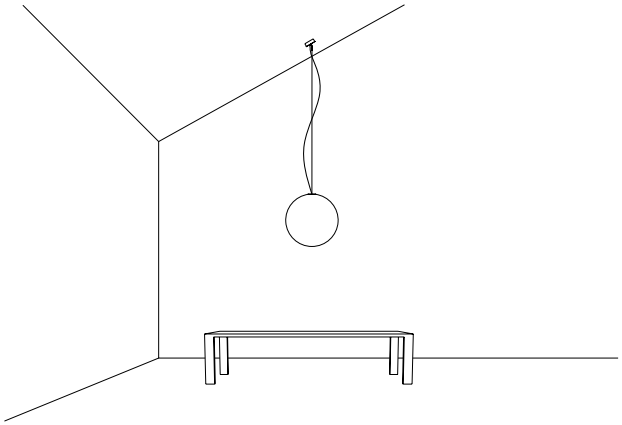
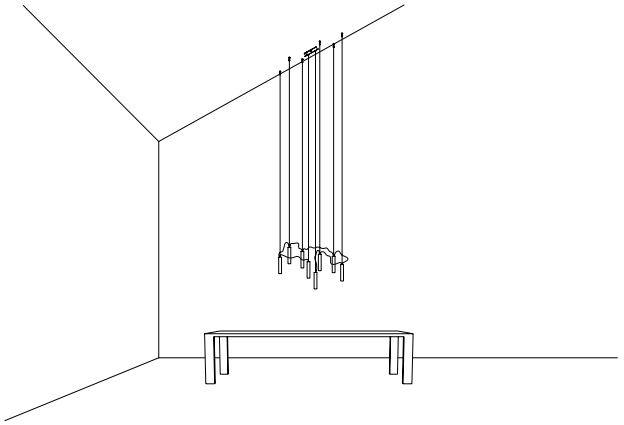
1A0530003 - SLOPED CEILING FIXING HOOK