MODUX 4 STEPLIGHT

The Modux Four Steplight is low-voltage dimmable outdoor rated. The Cree 4 watt LED can be easily replaced if required. The optic is also simple to change if you wish to alter the beam width. Smaller size available (Modux 2 Steplight), steplight with slot also available.

DETAILS.
FINISHES AVAILABLE IN:
COPPER
STAINLESS STEEL
ALUMINUM POWDERCOAT – BLACK, BRONZE, WHITE

SIZE: Ø2 5/16" X 1/2" H; 2 7/16" OAH

4W, 90 LM/W, 90 CRI

COLOR TEMPS AVAILABLE:
2700K, 3000K, 4000K, 5000K

BEAM ANGLE: -5º, +10º

DRIVER OPTIONS:
R – 700MA REMOTE CONSTANT CURRENT (SERIES)
I - INTEGRAL (12V AC, PARALLEL)

IP68 – RATED FOR WET LOCATIONS.

CABLE LENGTH: 39.4" (1M) INCLUDED
***OTHER ACCESSORIES AND MOUNTING OPTIONS AVAILABLE.**
UL LISTED

II P L

PLUGLIGHTING.COM
INFO@PLUGLIGHTING.COM

5665 MELROSE AVENUE
STE 108 LOS ANGELES 90038

P. 323 467 5635
F. 323 467 5634

MODUX 4 STEPLIGHT

PLUGLIGHTING.COM
INFO@PLUGLIGHTING.COM

5665 MELROSE AVENUE
STE 108 LOS ANGELES 90038

P. 323 467 5635
F. 323 467 5634

MODUX 4 STEPLIGHT

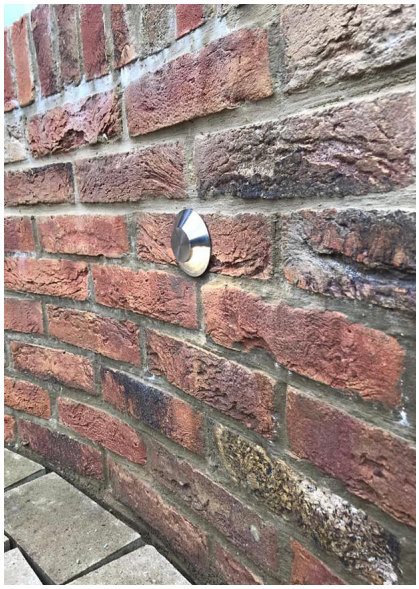

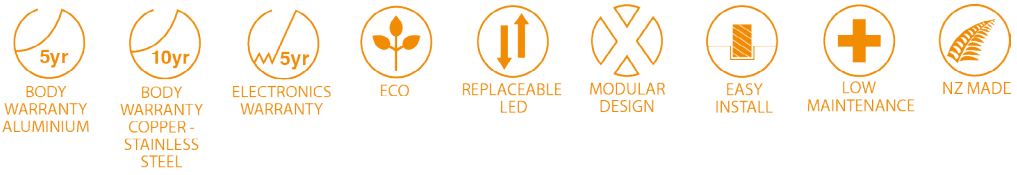

M4 STEPLIGHT CONFIGURATION

M4											
	Power		Flange		Driver		Material		Colour		Accessories
M4	4 Watt	SL	steplight	R	remote (series)	C	copper	27	2700K	PCAN	pvc canister
		SLS	steplight with slot	I	integral (12V AC) #	S	s/steel	30	3000K	ACAN	aluminium canister
						A	aluminium	40	4000K	SCAN	security canister
						BK	black	50	5000K	DCAN	deck canister
						BZ	bronze			AFMC	aluminium floor mount canister
						W	white			RP	recessed plug

Please specify powdercoat colour when ordering an aluminium luminaire

SPECIFICATIONS

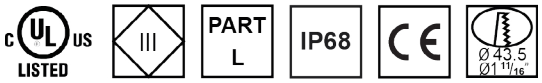

Power	4 Watt
Ingress Protection Rating	IP68
Cable	H05RN-F 1m Included
Material	- Black/ White/Bronze Powdercoated - Natural Copper - 316 Stainless Steel
Removable Light Engine	Pin Mounted 4W Cree XHP50 Chip
Colour Temperature	Warm White - 2700K and 3000K Neutral White - 4000k Cool White - 5000k
CRI	90+ CRI
Efficiency	90lm/w - Delivered from Luminaire with unobstructed beam
Input	700mA Constant current (Remote) 12V AC (Integral)
Warranty	Electronics Warranty 5 Years
Body Warranty	5 years Aluminium. 10 years Copper and Stainless Steel
Load Rating	Stainless Steel 3500kg/7700lbs Copper 3000kg/6600lbs Aluminium 1500kg/3300lbs
LED Shield	LED Bypass Shunt LED Reverse Polarity Protection

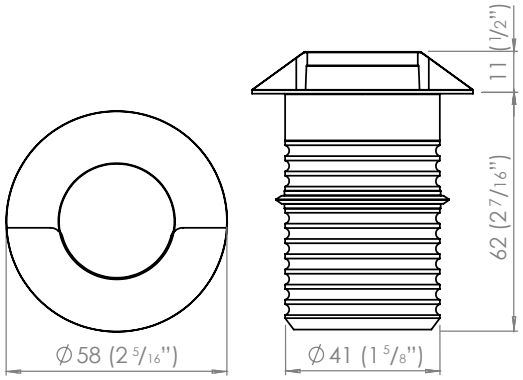

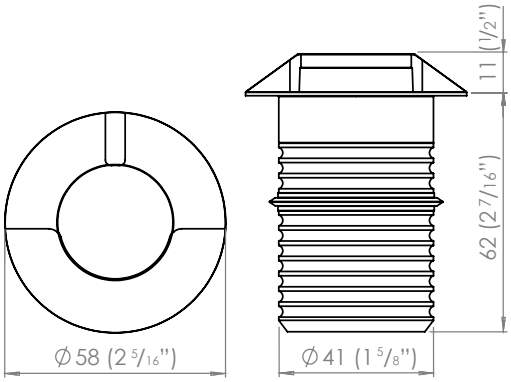

ACCESSORIES

Recessed mounting canisters
(Please refer to the canister spec sheets for more information)

IIPL

PLUGLIGHTING.COM
INFO@PLUGLIGHTING.COM

5665 MELROSE AVENUE
STE 108 LOS ANGELES 90038

P. 323 467 5635
F. 323 467 5634

BEAM ANGLES

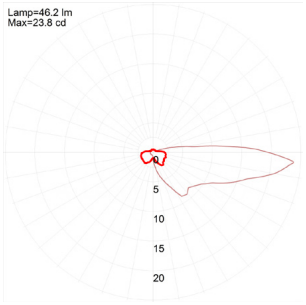

Steplight

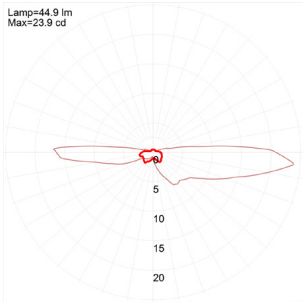

Steplight with Slot

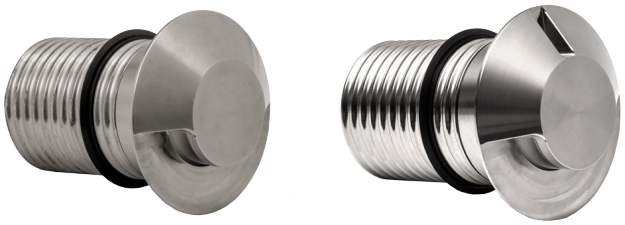

RECOMMENDATIONS

Using the mounting canisters will make recessed installation of this product simple. Core a hole in an existing wall or cast the canister in. Once in place, simply push the fitting into the canister. The luminaire will be retained by a silicon wiper seal.

REPLACING COMPONENTS

Firstly remove the luminaire from its recessed location. Unscrew the flange paying close attention to the assembly order or refer to the diagram below. Locate the item that needs to be replaced, it is imperative you replace the component with factory LuxR parts to ensure correct operation of the luminaire. When reassembling make sure all the components are in their correct order to ensure water tightness and correct light output.

M4 STEPLIGHTS

The M4 luminaire range is powered by a 4 watt LuxR light engine that offers a wide choice of LED colours. The luminaire was developed to meet the challenge of delivering high quality practical accent lighting with maximum energy efficiency and a long, maintenance-free life.

All LuxR luminaires offer a replaceable LED system using Cree LED chips for maximum performance and long life. Precise LED binning by Cree ensure the same colour temperature across all our luminaires which allows LuxR products to be situated close to one another without the fear of colour variance in the colours.

This luminaire is extremely tough, durable and waterproof, making it ideal for installation in public spaces, large-scale projects and residential areas.

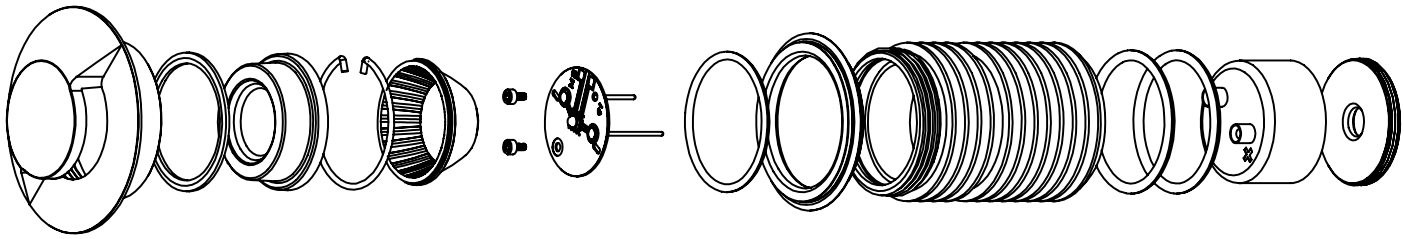

REMOTE DRIVER WIRED IN SERIES

Often referred to as series wiring the current in a series circuit follows one path from start-to-finish with the positive of the second LED connected to the negative of the first. Series wiring allows a single driver to be mounted remotely, powering a number of series fittings. Often the most simplest of wiring schemes as each fitting is connected to the next in a daisy chain. It removes the need for a smaller 12 volt driver in each fitting.

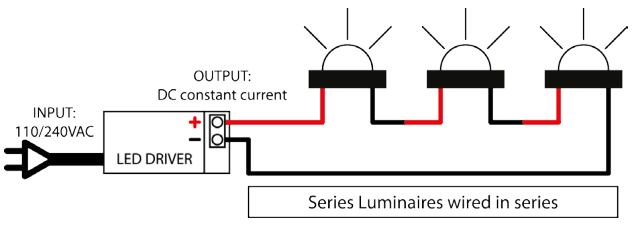

INTEGRAL DRIVER + TRANSFORMER

In a parallel circuit all the positive connections are tied together and back to the positive output of the LED driver and all the negative connections are tied together and back to the negative output of the driver. The integral driver option allows LuxR fittings to be wired in parallel to existing or new installations where a wire wound or magnetic transformer is being used.

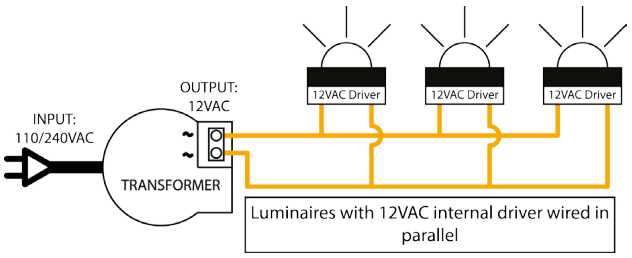

IIPL
PLUGLIGHTING.COM
INFO@PLUGLIGHTING.COM
5665 MELROSE AVENUE
STE 108 LOS ANGELES 90038
P. 323 467 5635
F. 323 467 5634